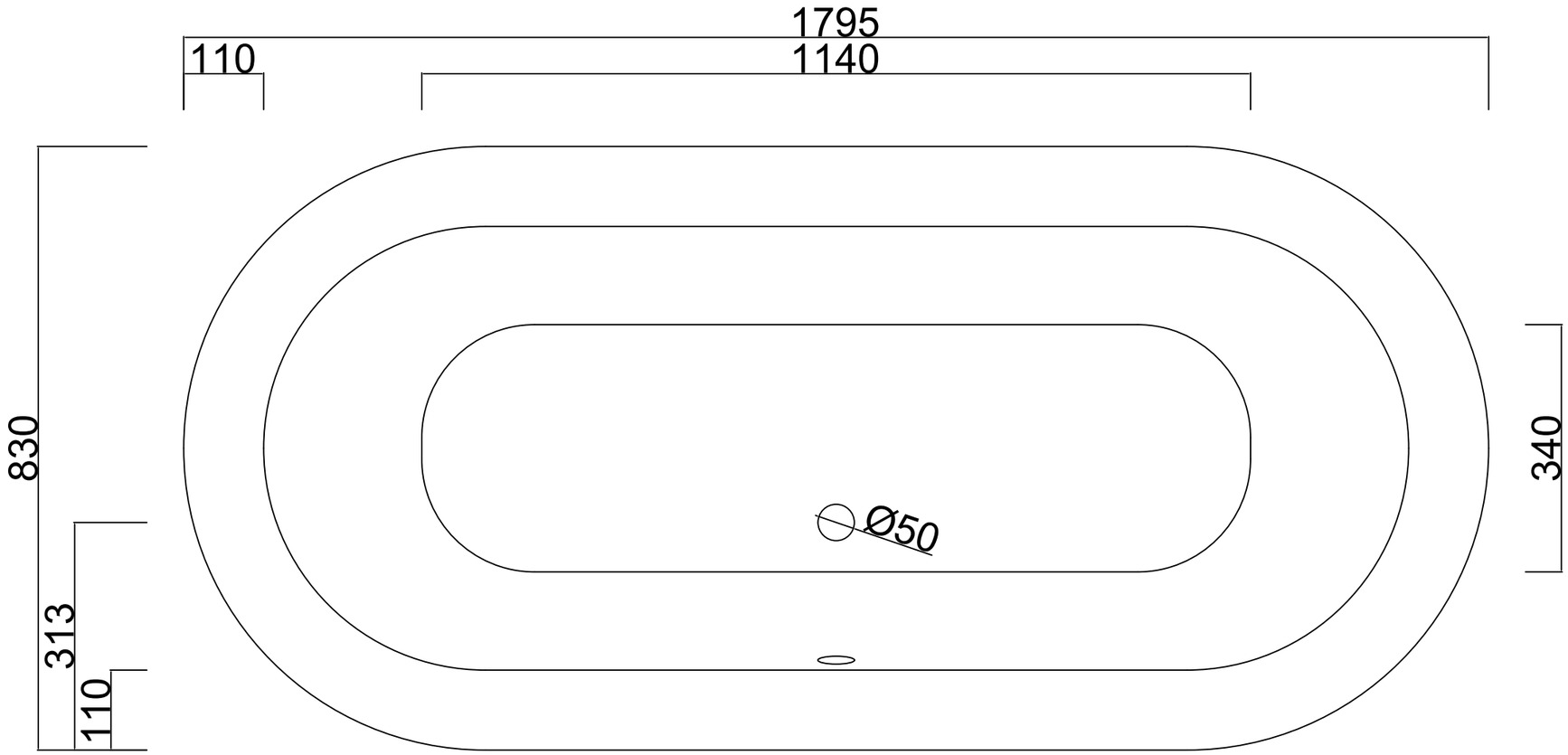
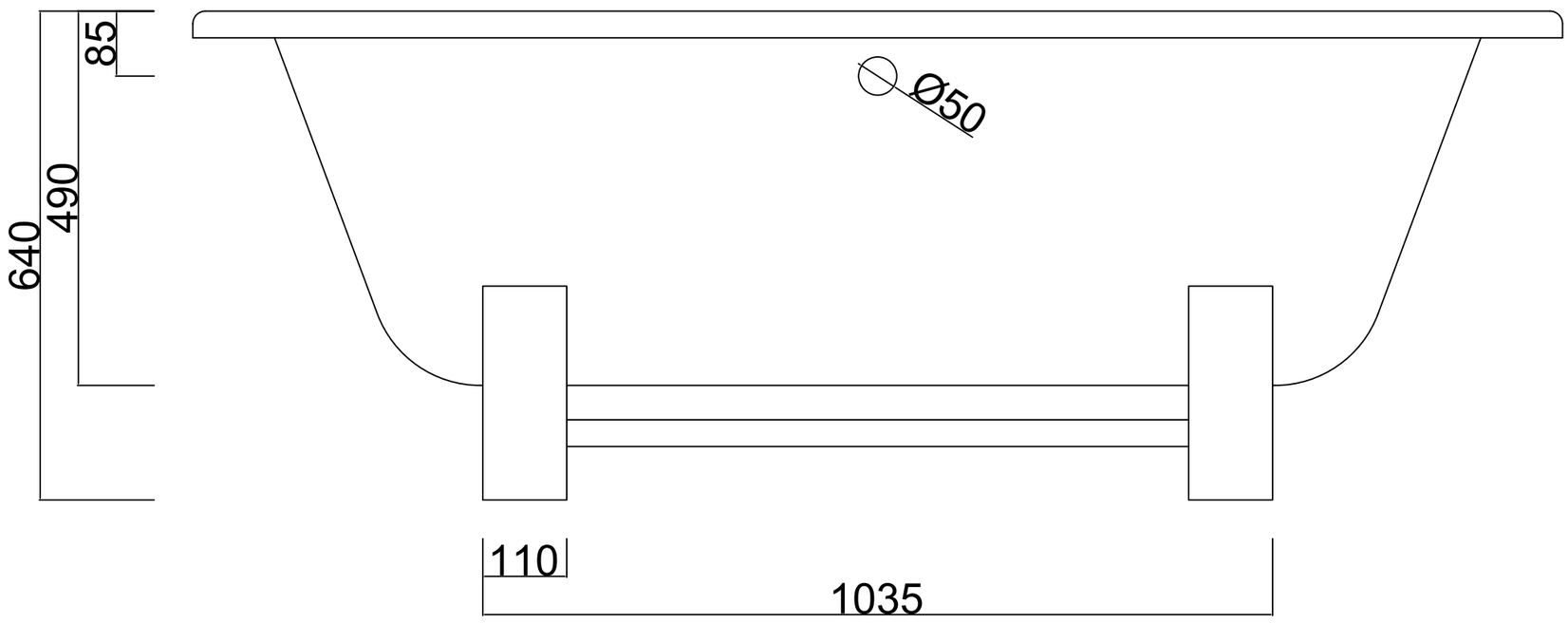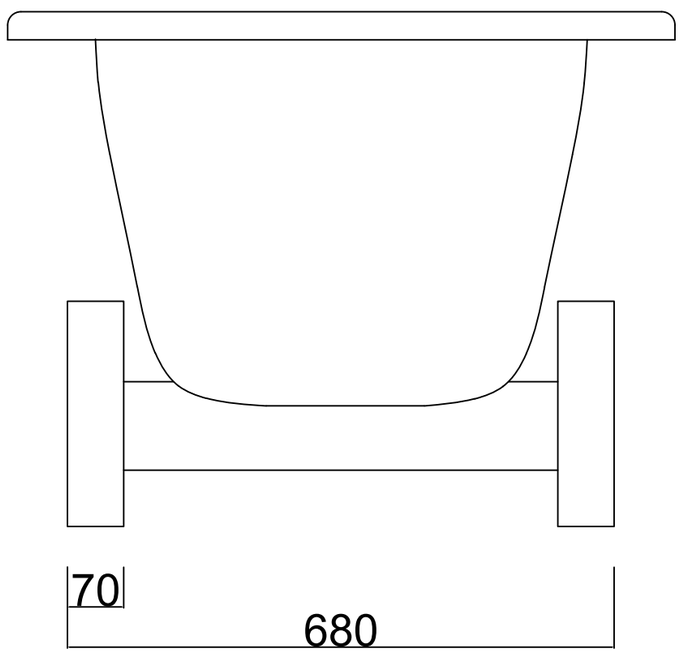
Acrylic sheet = 3.2mm